3 YEAR WARRANTY Blomberg

Blomberg
seit 1883

FREESTANDING & BUILT-IN
NEW RANGE COLLECTION 2015/16

COOLING • COOKING • WASHING • DRYING

IN HARMONY WITH YOUR LIFE

All Blomberg appliances have a 3-year warranty as standard to give you complete peace of mind.

CONTENTS

	FREESTANDING	BUILT-IN	
REFRIGERATION **6-19**			OVENS **42-47**
WASHING MACHINE **20-25**			HOBS **48-57**
WASHER DRYER **26-29**			REFRIGERATION **58-61**
TUMBLE DRYER **30-33**			WASHING MACHINE **62-65**
DISHWASHER **34-37**			WASHER DRYER **66-69**
COOKERS **38-41**			DISHWASHER **70-73**

TECHNICAL DETAILS
Freestanding **76-84**
Built-In **85-91**

BUILT-IN INSTALLATION
Diagrams **93-96**

IN HARMONY WITH:

LIFE

With over 125 years of production and expertise in the appliance and metal industries, Blomberg is recognised as a German quality brand in home appliances. Through an outstanding collection of environmental and user-friendly products, Blomberg aims to bring harmony to your life at home.

NATURE

Preservation of natural resources is a priority for Blomberg, where we continually strive to redefine the energy and water efficiency levels of home appliances.

Blomberg products are produced in factories that are ISO 14001 certified. ISO 14001 is an internationally accepted standard that aims to put in place an effective Environmental Management System (EMS).

Not only are our production facilities environmentally-conscious but also our products, which are all RoHS compliant and are manufactured with components that are 95% recyclable. RoHS stands for the “Restriction of the use of Hazardous Substances”, limiting the levels of lead, cadmium, mercury, hexavalent chromium, polybrominated biphenyl (PBB) and polybrominated diphenyl ether (PBDE) flame retardants.

HOME

Blomberg products are designed with the utmost care to detail. They are in harmony with your home through an appealing design that complements a variety of styles. All models are in harmony with each other by means of a common design language.

YOU

Blomberg products are in harmony with you because they try to make your life more enjoyable. From easy-to-use controls to reliable safety mechanisms, from unique technological innovations to practical solutions, they will exceed all expectations.

You can depend on our quality. Our production sites meet the most demanding quality standards (ISO 9001 – TSE and ISO 14001 – SGS). Our washing machine production was awarded the TPM Excellence Award 2002 as the “Best Washing Machine Factory in the World”. 100% of all Blomberg household appliances undergo computer-controlled testing before delivery and random sampling for extensive testing, raises the level of quality assurance further.

Blomberg
seit 1883

With over 125 years of production and expertise in the appliance industry, Blomberg is recognised as a German-quality brand in home appliances.

Every product is thoroughly tested before leaving the factory. That is why Blomberg offers a 3-year warranty on all products across the range.

3 YEAR WARRANTY Blomberg

Through an outstanding collection of environmental and user-friendly products, Blomberg aims to bring harmony to your life.

AMERICAN-STYLE & MULTI-DOOR REFRIGERATION

Blomberg American-Style and Multi-Door refrigeration, offers large capacity cooling to store all your favourite food and drinks. Equipped with great looks and design, they will make a stylish addition to any kitchen.

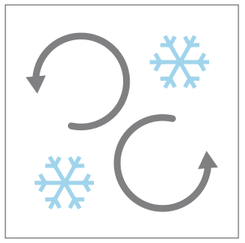

DUAL COOLING

Two fans and evaporators maintain the ideal humidity in the fridge and ensure no transfer of odours.

FLEXI-ZONE*

Convertible compartment which can be used as either a fridge or freezer, all at the touch of a button.

ICE AND WATER DISPENSER*

Keep yourself refreshed with a constant supply of cold water and ice.

BLUE LIGHT TECHNOLOGY*

Blue LED lights in the crisper drawer, keeps fruit and vegetables fresher for longer, meaning less waste and less trips to the grocery store.

*Features shown not available on all models.

DIGITAL DISPLAY

The LED display allows accurate temperature settings with the use of touch-control buttons.

AIR FLOW COOLING

Multiple air vents in the fridge and freezer maintain an even temperature on every shelf level and rapidly restores the temperature after the door has been opened.

AMERICAN-STYLE & MULTI-DOOR REFRIGERATION

KFD4952XD

84cm Multi-Door Fridge Freezer

MAIN FEATURES

Automatic Ice and Water
Keep yourself refreshed with a constant supply of cold water and ice

Dual Cooling
Two fans and evaporators maintain the ideal humidity in the fridge and ensures no transfer of odours

Blue Light Technology
Blue LED lights in the crisper drawer keeps fruit and vegetables fresher for longer, meaning less waste and less trips to the grocery store

GENERAL FEATURES

- Super Fresh Zone
- Airflow Cooling
- Door Open Alarm
- Odour Filter
- Fast Freeze

Dimensions:
W:84cm H:182cm D:74.5cm
Capacity: 530L
(378L fridge, 152L freezer)

Energy efficiency: A+
Colour: Stainless Steel

KWD2330X

91cm American-Style Fridge Freezer

MAIN FEATURES

Dual Cooling
Two fans and evaporators maintain the ideal humidity in the fridge and ensures no transfer of odours

Plumbed Ice and Water Dispenser
Chilled and filtered water and cubed or crushed ice on tap

Super Fresh Zone
Low temperature fridge drawer, ideal for safely storing fresh meat and fish

GENERAL FEATURES

- Odour Filter
- Door Open Alarm
- Fast Freeze
- In-Door Ice Maker
- Touch Control LED Display

Dimensions:
W:91cm H:179cm D:73cm
Capacity: 544L
(368L fridge, 176L freezer)

Energy efficiency: A+
Colour: Stainless Steel

KND9920X

Flexi-Zone Drawer

74cm Multi-Door Fridge Freezer

MAIN FEATURES

Flexi-Zone
Top drawer can be used as either a fridge or freezer, all at the touch of a button

Dual Cooling
Two fans and evaporators maintain the ideal humidity in the fridge and ensures no transfer of odours

Blue Light Technology
Blue LED lights in the crisper drawer keeps fruit and vegetables fresher for longer, meaning less waste and less trips to the store

GENERAL FEATURES

- Chrome Wine Rack
- Touch Control LED
- Door Open Alarm
- Internal LED Lighting
- Odour Filter

Dimensions:
W:74cm H:185cm D:77cm
Capacity: 466L
(268L fridge, 48L multi-zone
150L freezer)

Energy efficiency: A+
Colour: Stainless Steel

COMBI FRIDGE FREEZER

The Blomberg range of combi fridge freezers are all frost free to save you time and hassle.

FOOD PROTECTOR TECHNOLOGY

Will keep the freezer working even in ambient temperatures as low as -15°C, ensuring your food stays frozen.

FROST FREE

Fan cooling removes the build up of ice and keeps the freezer dry.

ANTIBACTERIAL DOOR SEALS

For maximum hygiene, the door seals are covered with an antibacterial coating that eliminates bacteria.

CHROME WINE RACK*

Convenient and stylish way to store bottles of wine and 2 litre soft drink bottles.

LED LIGHTING*

Takes up less space and is more durable, brighter and energy efficient than a standard bulb.

ICE-MAKING ACCESSORIES

Seperate ice-making features in the freezer, giving you easy and convienent access.

*Features shown not available on all models.

COMBI REFRIGERATION

KGM9691

70cm Frost Free Combi Fridge Freezer

MAIN FEATURES

Food Protector Technology
Will keep the freezer working even in ambient temperatures as low as -15°C

Twist and Serve Ice Cube Makers
The perfect place to make and store ice cubes

LED Lighting
Takes up less space and is more durable, brighter and energy efficient than a standard bulb

GENERAL FEATURES

- Frost Free
- Chrome Wine Rack
- Chrome Coated Bottle Retainer
- Two Large Salad Crispers
- Antibacterial Door Seals

Dimensions:
W:70cm H:191cm D:60cm
Capacity: 348L
(230L fridge, 118L freezer)

Energy efficiency: A+
Colour: White & Stainless Steel

KGM9681

60cm Frost Free Combi Fridge Freezer

MAIN FEATURES

Large Freezer Capacity
Four large drawers offer 129L capacity, enough space to take full advantage of those supermarket offers.

Food Protector Technology
Will keep the freezer working even in ambient temperatures as low as -15°C

LED Lighting
Takes up less space and is more durable, brighter and energy efficient than a standard bulb

GENERAL FEATURES

- Frost Free
- Chrome Wine Rack
- Dairy Compartment
- Slimline Ice Storage Tray
- Antibacterial Door Seals

Dimensions:
W:59.5cm H:191cm D:65cm
Capacity: 318L
(189L fridge, 129L freezer)

Energy efficiency: A+
Colour: White & Stainless Steel

KGM9550P

55cm Frost Free Combi Fridge Freezer

MAIN FEATURES

Food Protector Technology
Will keep the freezer working even in ambient temperatures as low as -15°C

Slimline Ice Tray
Ideal for making and storing ice cubes or freezing berries

Dairy Compartment
Separate covered storage area for keeping all your dairy items

GENERAL FEATURES

- Frost Free
- Chrome Wine Rack
- Reversible Door
- Antibacterial Door Seals
- Adjustable Glass Shelves

Dimensions:
W:54.5cm H:182cm D:60cm
Capacity: 244L
(157L fridge, 87L freezer)

Energy efficiency: A+
Colour: White

KGM9530P

55cm Frost Free Combi Fridge Freezer

MAIN FEATURES

Food Protector Technology
Will keep the freezer working even in ambient temperatures as low as -15°C

Slimline Ice Tray
Ideal for making and storing ice cubes or freezing berries

Dairy Compartment
Separate covered storage area for keeping all your dairy items

GENERAL FEATURES

- Frost Free
- Antibacterial Door Seals
- Reversible Door
- Adjustable Glass Shelves

Dimensions:
W:54.5cm H:153cm D:60cm
Capacity: 197L
(134L fridge, 63L freezer)

Energy efficiency: A+
Colour: White

ONE DOOR

The Blomberg one door range can be paired together and comes in a variety of heights to suit your needs.

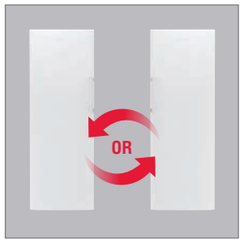

REVERSIBLE DOORS

Convenient feature, if you are restricted on where you can place your appliance.

FROST FREE*

Fan cooling removes the build up of ice and keeps the freezer dry.

ANTIBACTERIAL DOOR SEALS

For maximum hygiene, the door seals are covered with an antibacterial coating that eliminates bacteria.

LED LIGHTING*

Takes up less space and is more durable, brighter and energy-efficient than a standard bulb.

DAIRY COMPARTMENT*

Separate covered storage area for keeping all your dairy items.

FAST FREEZE*

Rapidly freeze fresh food to preserve the taste and nutrients.

*Features shown not available on all models.

ONE DOOR REFRIGERATION

SOM9673P

60cm Tall Larder Fridge

MAIN FEATURES

Super Fresh Zone
Low temperature fridge drawer, ideal for storing fresh meat and fish

Chrome Wine Rack
Convenient and stylish way to store bottles of wine and 2 litre soft drink bottles

Antibacterial Door Seals
Helps to prevent bacteria from forming and entering the fridge

GENERAL FEATURES

- Reversible Door
- Chrome Coated Bottle Retainer
- Large Salad Crisper
- Adjustable Glass Shelves

Dimensions:
W:60cm H:171cm D:65cm
Capacity: 367L

Energy efficiency: A+
Colour: White

SSM9450

55cm Tall Larder Fridge

MAIN FEATURES

Chrome Wine Rack
Convenient and stylish way to store bottles of wine and 2 litre soft drink bottles

Antibacterial Door Seals
Helps to prevent bacteria from forming and entering the fridge

Dairy Compartment
Separate covered storage area for keeping all your dairy items

GENERAL FEATURES

- Reversible Door
- Chrome Coated Bottle Retainer
- Large Salad Crisper
- Adjustable Glass Shelves

Dimensions:
W:54.5cm H:145.5cm D:60cm
Capacity: 249L

Energy efficiency: A+
Colour: White

FNT9673P

60cm Tall Frost Free Freezer

MAIN FEATURES

Food Protector Technology
Will keep the freezer working even in ambient temperatures as low as -15°C

High Temperature Warming
The red light will alert you if the freezer temperature starts to rise

Twist and Serve Ice Cube Makers
The perfect place to make and store ice cubes

GENERAL FEATURES

- Frost Free
- Advanced LED Display
- Fast Freeze Compartment
- Freezer Guard
- Reversible Door

Dimensions:
W:60cm H:171cm D:65cm
Capacity: 250L

Energy efficiency: A+
Colour: White

FNT9550

55cm Tall Frost Free Freezer

MAIN FEATURES

Food Protector Technology
Will keep the freezer working, even in ambient temperatures as low as -15°C

Frost Free
No manual defrosting and prevents ice building up and restricting valuable storage space

Fast Freeze
Rapidly freeze fresh food to preserve the taste and nutrients

GENERAL FEATURES

- Slimline Ice Storage Tray
- High Temperature Warning Light
- Reversible Door
- Transparent Freezer Drawers

Dimensions:
W:54.5cm H:145.5cm D:60cm
Capacity: 157L

Energy efficiency: A+
Colour: White

ONE DOOR REFRIGERATION

TSM1551P

55cm Undercounter Larder Fridge

MAIN FEATURES

Dairy Compartment
Separate covered storage area for keeping all your dairy items

Antibacterial Door Seals
Helps to prevent bacteria from forming and entering the fridge

Adjustable Glass Shelves
Flexibility to change shelf height, useful when storing tall items

GENERAL FEATURES

- Chrome-coated Bottle Retainer
- Reversible Door
- Large Salad Crisper
- Auto Defrost

Dimensions:
W:54.5cm H:84cm D:59.5cm
Capacity: 130L

Energy efficiency: A+
Colour: White

TSM1541P

55cm Undercounter Fridge

MAIN FEATURES

Four Star Freezer Compartment
Allows you to freeze fresh food.

Dairy Compartment
Separate covered storage area for keeping all your dairy items

Antibacterial Door Seals
Helps to prevent bacteria from forming and entering the fridge

GENERAL FEATURES

- Chrome-coated Bottle Retainer
- Reversible Door
- Large Salad Crisper
- Auto Defrost
- Adjustable Glass Shelves

Dimensions:
W:54.5cm H:84cm D:59.5cm
Capacity: 114L

Energy efficiency: A+
Colour: White

FNE1531P

55cm Undercounter Frost Free Freezer

MAIN FEATURES

Frost Free
No manual defrosting and prevents ice building up and restricting valuable storage space

Food Protector Technology
Will keep the freezer working even in ambient temperatures as low as -15°C

Fast Freeze
Rapidly freeze fresh food to preserve the taste and nutrients

GENERAL FEATURES

- LED Indicator Lights
- Slimline ice storage tray
- Reversible door
- High Temperature Warning Light

Dimensions:
W: 54.5cm H:84cm D:59.5cm
Capacity: 75L

Energy efficiency: A+
Colour: White

FREESTANDING WASHING MACHINES

Combining great performance with an exquisite design, Blomberg washing machines bring a new dimension to laundry care.

DESIGNED TO SAVE YOU TIME

Wash a full load in just 28 minutes
Wash a small load (2kg) in just 14 minutes

OPTIMA INVERTER MOTOR*

Provides a quieter and more efficient operation and it comes with 10-year warranty for extra peace of mind.

ENERGY EFFICIENCY

Blomberg washing machines have been designed to achieve outstanding fabric care and wash results using the least possible amount of electricity, water and detergent.

EXTRA LARGE DOOR*

Making loading and unloading of large items much easier.

DURABLE HEATER

Special nickel-coated heater is a hundred times more durable than regular heaters. Thus, it prolongs the life of your washing machine.

QUALITY TESTED

For long life expectancy, we test 100% of our washing machines before they leave our factory.

*Features shown not available on all models.

FREESTANDING WASHING MACHINES

LWF29441W

9kg Washing Machine with 1400rpm Spin Speed

MAIN FEATURES

Large 9kg Capacity
Wash more in one go, saving you time and money

Fast Full Load Wash
Wash a large 9kg load in only 28 min

Optima Inverter Motor
Provides a quieter and more efficient operation and it comes with 10-year warranty for extra peace of mind

GENERAL FEATURES

- Mini 14' programme
- Automatic Water Level Reduction
- High Spin Speed
- Extra Large 34cm Porthole
- 24h Time Delay Function

Dimensions:
W:60cm H:85cm D:60cm
Capacity: 9kg
Spin Speed: 1400rpm

Energy efficiency: A
Colour: White

LWF28441W

8kg Washing Machine with 1400rpm Spin Speed

MAIN FEATURES

Large 8kg Capacity
Wash more in one go, saving you time and money

Fast Full Load Wash
Wash a large 8kg load in only 28 min

Optima Inverter Motor
Provides a quieter and more efficient operation and it comes with 10-year warranty for extra peace of mind

GENERAL FEATURES

- Automatic Water Level Reduction
- Extra Large 34cm Porthole
- 24h Time Delay Function
- Mini 14' Programme
- High Spin Speed

Dimensions:
W:60cm H:85cm D:54cm
Capacity: 8kg
Spin Speed: 1400rpm

Energy efficiency: A
Colour: White

LWF27441W

7kg Washing Machine with 1400rpm Spin Speed

MAIN FEATURES

Fast Full Load Wash
Wash a large 7kg load in only 28 min

A+++ energy rating
Saves you up to 30% in energy consumption when compared with A-class models

Optima Inverter Motor
Provides a quieter and more efficient operation and it comes with 10-year warranty for extra peace of mind

GENERAL FEATURES

- Automatic Water Level Reduction
- Extra Large 34cm Porthole
- 24h Time Delay Function
- Mini 14' Programme
- High-spin Speed

Dimensions:
W:60cm H:85cm D:50cm
Capacity: 7kg
Spin Speed: 1400rpm

Energy efficiency: A
Colour: White

WNF63211

6kg Washing Machine with 1200rpm Spin Speed

MAIN FEATURES

Fast Full Load Wash
Wash a 6kg load in only 28 min

A++ Energy Rating
Save money on energy bills

LED Display
Showing time remaining and time delay, it keeps you informed at all times

GENERAL FEATURES

- Automatic Water Level Reduction
- Large 30cm Porthole
- 19h Time Delay Function
- Mini 14' Programme
- 15 Programmes and 4 additional functions

Dimensions:
W:60cm H:85cm D:47cm
Capacity: 6kg
Spin Speed: 1400rpm

Energy efficiency: A
Colour: White

FREESTANDING WASHING MACHINES

WNF5200

5kg Washer with 1000rpm Spin Speed

MAIN FEATURES

Fast Full Load Wash
Wash a 5kg load in only 28 min

Time Delay
Plan the wash when it's more convenient

Mini 14'
Wash 2kg in only 14 minutes

GENERAL FEATURES

- 15 programmes and 4 additional functions
- Programme Progress indicator Lights
- Slim Depth for Easy Installation
- Automatic Water Level Reduction

Dimensions:
W:60cm H:85cm D:47cm
Capacity: 5kg
Spin Speed: 1000rpm

Energy efficiency: A+
Colour: White

FREESTANDING WASHER DRYER

With modern design and incorporating the latest technologies, the new Blomberg washer dryer will help you save time and money on utility bills and will make a perfect addition to any home.

OPTIMA INVERTER MOTOR

Provides a quieter and more efficient operation and it comes with 10 year warranty for extra peace of mind.

DESIGNED TO SAVE YOU TIME

The quick washing programmes and wash & dry programmes are a perfect solution for when you're in a hurry

Wash & Dry up to 5 shirts in 60 minutes
Wash a full 8kg load in 28 minutes

LOWEST WATER CONSUMPTION

With one of the lowest water consumption on the market, this washer dryer helps you save a significant amount of water every year, helping you save money on your utility bills.

LARGE CAPACITY (8KG WASHING / 5 KG DRYING)

Save time by doing fewer loads

ENERGY EFFICIENT

Maximum performance with A rated energy efficiency.

WASH THROUGH DRY PROGRAMMES – MAXIMUM CONVENIENCE

Ready to wear clothes with the specifically designed wash through dry programmes or by applying the drying function to washing programmes.

FREESTANDING WASHER DRYER

LRF285411W

8/5Kg Washer Dryer with 1400 spin speed

MAIN FEATURES

Hygiene+ Wash & Dry programme
Specifically designed for people with sensitive skin or allergy sufferers. Endorsed by Allergy UK.

LED display
Keeps you informed of the status of each cycle

High spin speed
Save time and money, while drying

GENERAL FEATURES

- Mini 14 programme – wash 2kg in 14 min
- 24 hr time delay
- Automatic Water Level Reduction
- Extra Large 34cm Door
- 16 programmes

Dimensions:
W 60cm H 85cm D 54cm
Capacity: 8/5kg
Spin Speed: 1400

Energy efficiency: A
Colour: White

FREESTANDING TUMBLE DRYERS

Designed to save you time and money, the Blomberg tumble dryers are very simple and easy to operate.

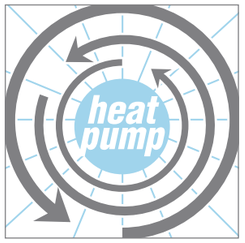

HEAT PUMP TECHNOLOGY*

Using lower temperatures to dry the load, it saves you money on the energy bills and provides a better protection for the laundry.

LARGE CAPACITY

Blomberg condenser tumble dryers allow you to dry large loads in one cycle.

SENSOR DRYING

Using sensors to measure the level of moisture in the drum, the special sensor programmes automatically stop when the desired dryness level is achieved. This stops overdrying, saving you money on energy bills.

EXTRA LARGE DOOR*

Making loading and unloading of large items much easier.

ANTI-CREASE

The anti-crease cycle separates and smooths your laundry after the drying cycle, by means of a gentle drum action; so it is wrinkle-free and ready to wear.

QUALITY TESTED

For long life expectancy, we test 100% of our washing machines before they leave our factory.

*Features shown not available on all models.

FREESTANDING TUMBLE DRYERS

3 YEAR WARRANTY Blomberg

LTS2832W

8kg Heat Pump Condenser Sensor Dryer

MAIN FEATURES

Heat Pump Technology
Kinder on your clothes and the environment

A++ Energy Rating - saves you up to 70% in energy consumption when compared with C class models

Large 8kg Capacity
Dry more in one go, saving you time and money

GENERAL FEATURES

- Sensor Programmes
- Large Glass Porthole
- 24h Time Delay
- Automatic Anti-crease feature
- LED display

Dimensions:
W:60cm H:85cm D:60.9cm
Capacity: 8kg

Energy efficiency: A+
Colour: White

LTK2802W

8kg Condenser Sensor Dryer

MAIN FEATURES

Large 8kg Capacity
Dry more in one go, saving you time and money

B Energy Rating
Great performance with minimum energy consumption, saving you money on energy bills

Sensor Programmes
Stop when the desired dryness level is achieved, saving you money on energy bills and providing a better protection for the clothes

GENERAL FEATURES

- Large Glass Porthole
- 24h Time Delay
- LED Display
- Auto Cool Down Phase
- Automatic Anti-crease feature

Dimensions:
W:60cm H:85cm D:60.9cm
Capacity: 8kg

Energy efficiency: B
Colour: White

TKF7431

7kg Condenser Sensor Dryer

MAIN FEATURES

B Energy Rating
Great performance with minimum energy consumption, saving you money on energy bills

Sensor Programmes
Stop when the desired dryness level is achieved, saving you money on energy bills and providing a better protection for the clothes

Auto Cool Down Phase
Cool air is blown into the drum just before the cycle ends, allowing you to comfortably unload the laundry

GENERAL FEATURES

- LCD Display
- Large Porthole Door
- Automatic Anti-Creasing function
- Reverse Action Drum
- 24h Time Delay

Dimensions:
W:60cm H:85cm D:54cm
Capacity: 7kg

Energy efficiency: B
Colour: White

FREESTANDING DISHWASHERS

Providing high performance, maximum safety and flexibility, the Blomberg dishwashers will be the perfect assistant in your kitchen.

OPTIMA INVERTER MOTOR

The advanced brushless motor provides a quieter and more efficient operation and it comes with 10 year warranty for extra peace of mind.

ENERGY EFFICIENCY

Rated A+ and A++ for energy efficiency, freestanding dishwashers provide maximum performance with minimum energy consumption.

ADDITIONAL CUTLERY TRAY*

Comes in handy when you have extra cutlery to wash or if you need to free up the space in the bottom basket to load larger items.*

BASKET FLEXIBILITY

The height of the upper basket can be adjusted to make room for larger items in the bottom basket.

TIME SAVING PROGRAMMES

Perfect for when you are in a hurry, the quick programme can deliver a full load wash in 30 or 58 minutes depending on how soiled the dishes are.

QUALITY TESTED

For long life expectancy, we test 100% of our washing machines before they leave our factory.

*Features shown not available on all models.

FREESTANDING DISHWASHERS

LDFN2240W

Full-size Dishwasher with A++ Energy Rating

MAIN FEATURES

Additional Cutlery Tray
Comes in handy when you have extra cutlery to wash or if you need to free up the space in the bottom basket to load larger items

High Energy Efficiency: A++ rating
Maximum performance with minimum energy consumption

Optima Inverter Motor
Provides a quieter and more efficient operation and it comes with 10 year warranty for extra peace of mind

GENERAL FEATURES

- Express 58' programme
- Height Adjustable Basket
- Super-gloss Function
- Rapid-clean Function
- 24h Time Delay

Dimensions:
W:60cm H:85cm D:60cm
Noise Level: 43dB
Water consumption: 10L

Energy efficiency: A+
Place Settings: 13
Colour: White

GSC9124

Full-size Dishwasher with A+ Energy Rating

MAIN FEATURES

Adjustable Upper Basket
The height of the upper basket can be adjusted to make room for larger items in the bottom basket

Variety of Programmes
5 different programmes to choose from, for added flexibility in programming the wash

Half Load Function
Save time, energy and water when washing smaller loads

GENERAL FEATURES

- DailyWash 90 minute programme
- Removable Cutlery Basket
- Salt & Rinse Aid Indicator Lights
- 5 Programmes and 4 Wash Temperatures"

Dimensions:
W:60cm H:85cm D:60cm
Noise Level: 49dB
Water consumption: 15L

Energy efficiency: A+
Place Settings: 12
Colour: White

LDFS1110W

Slim-size Dishwasher with A+ Energy Rating

MAIN FEATURES

Adjustable Upper Basket
The height of the upper basket can be adjusted to make room for larger items in the bottom basket

High Energy Efficiency: A+ rating
Maximum performance with minimum energy consumption

Express 58' Programmes
Wash a full load of normally soiled dihes at 60 degrees in only 58 minutes

GENERAL FEATURES

- Folding Plate Supports in Lower Basket
- Up to 9hr Time Delay
- Digital Display
- Extra Rinse Function
- Removable Cutlery Basket

Dimensions:
W: 45cm D:60cm H:85cm
Noise Level: 49dB
Water consumption: 13L

Energy efficiency: A+
Place Settings: 10
Colour: White

FREESTANDING COOKING

Big capacity delivered in a modern design, with large viewing windows ensures easy and effortless cooking with a Blomberg freestanding cooker.

LARGE CAPACITY

All Blomberg freestanding cookers feature two separate ovens for increased cooking space. The main ovens offer great capacity for day-to-day cooking while the second cavity can be used when extra capacity is needed, or when you need to cook part of your meal at a different temperature to the main oven. This top cavity can also be used as a grill.

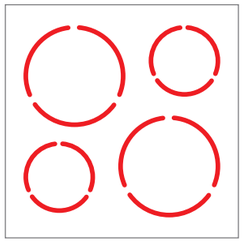

4 ZONE HOBS

Whether it's' gas or electric, both cookers have 60cm wide hobs with 4 zones for plenty of space when cooking. The electric hobs offer quick pan heating, while the gas hobs provide sturdy support for your pans.

EASY CLEANING

All ovens are coated with a durable enamel lining, with our electric models benefiting from Catalytic back walls in the main ovens. All benefit from improved designed oven doors with full glass panels that can be wiped clean, or removed for deeper cleaning if required.

EFFICIENCY

All our electric ovens are A-rated, while the gas main ovens are A+ and secondary ovens are A.

SAFETY

All gas models have Flame Safety Devices and our electric model have residual heat indicators on the glass top.

TIMERS

Blomberg cookers have large, easy to read clocks that can also be used as countdown timers and automatically turn off the main ovens after cooking. The timer on the electric models can also be used to program the oven to turn on at a designated time.

FREESTANDING COOKERS

HKN60

60cm Electric Cooker

MAIN FEATURES

4 Zone Ceramic Hob
For quick pan heating

Fan Main Oven
Ensures even heat distribution across its 69L capacity

Catalytic liner in the main oven
Helps to reduce cleaning time

GENERAL FEATURES

- Secondary oven and grill with 38L capacity
- Full glass inner doors help to reduce cleaning
- Residual heat indicators
- Includes timer - automatically turns off mains cooking can also be used to turn on the oven at a specific time

Dimensions:
W:60cm H:90cm D:60cm
Main Oven Capacity: 69L
Secondary Oven Capacity 36L

Energy efficiency: A
Colour: White (W), Black (Z)

GGN60

60cm Gas Cooker

MAIN FEATURES

4 burner gas hob
For heating a variety of pan sizes

72L main gas oven
For zone cooking

Durable enamel oven lining
For easier cleaning

GENERAL FEATURES

- Secondary oven and grill with 32L capacity
- Full-glass inner doors help to reduce cleaning
- Flame safety device
- Includes timer - automatically turns off mains oven

Dimensions:
W:60cm H:90cm D:60cm
Main Oven Capacity: 72L
Secondary Oven Capacity 32L

Energy efficiency: A*A
Colour: Black (Z)

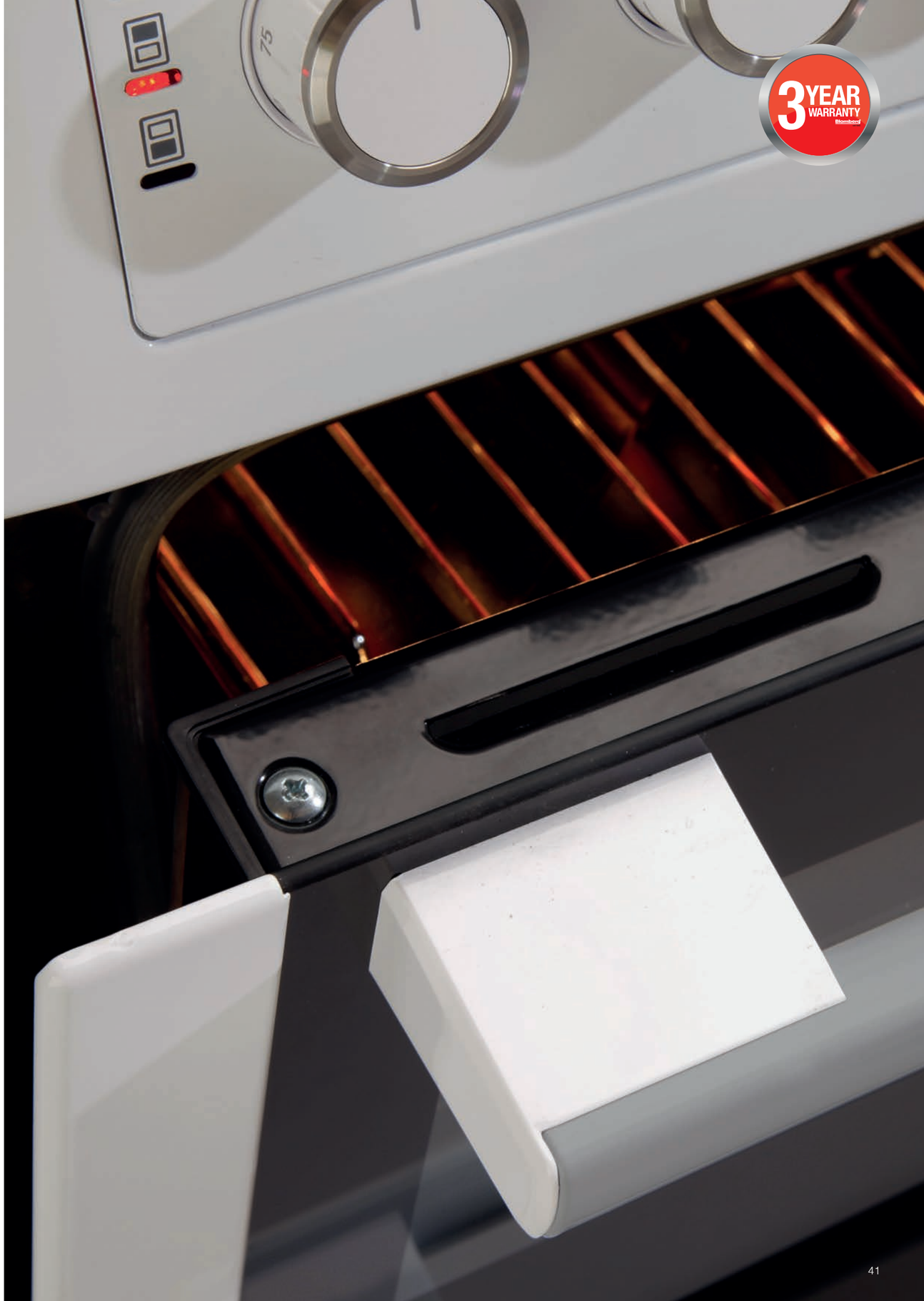

BUILT-IN OVENS

We invite you to admire the smooth edges, neat surfaces and dateless style that define the Blomberg built-in oven range.

PRACTICAL CONTROL DISPLAYS

The Blomberg fully programmable LED timers feature easy-to-view and easy-to-use symbols and functions. Allows you to pre-set your oven up to 24 hours in advance.

LARGE OVEN CAPACITY

With 71 litres oven capacity (108 litres combined for double ovens), Blomberg offers one of the most spacious oven interior in its class. It will provide enough room to roast a large turkey or prepare a great meal for your family or friends. The full-size tray, will also give you optimal cooking space while the deep tray design is ideal for roasting and baking.

EASY CLEAN FEATURES

All Blomberg ovens are coated with an 'Easy Clean' enamel. This long-lasting finish allows an easy eco-friendly cleaning of the oven cavity and trays. Selected ovens have catalytic liners in the oven interior. These absorb cooking grease and reduce food odours, reducing the need for aggressive cleaning and harsh chemicals.

ENERGY EFFICIENCY

All Blomberg built-in ovens are 'A' energy rated, offering the best performance with minimum energy consumption.

FINGER-PRINT FREE SURFACE

All Blomberg ovens in the range have fingerprint free panel and doors, so you won't have to worry about leaving behind a mark.

ROBUST OVEN DOOR

All Blomberg ovens feature a full glass door that can support heavy dishes and trays up to 22.5 kgs. In addition the new design hinge system allows easy door opening and removal – making the oven cleaning even easier.

BUILT-IN OVENS

BDO9564X

90cm Built-in Double Multifunction Oven

MAIN FEATURES

Design
Modern design with push-in pop-out control knobs

Timer
Fully programmable animated electronic timer

Catalytic Liners
Catalytic liner on side-walls for easy cleaning

GENERAL FEATURES

- Multifunction main oven and static top oven
- Easy-grip Control Knobs
- Tilted Grill Element for Easy Cleaning
- Grey Enamel with side racks

Dimensions:
H 89cm W 59.4cm D:56.7cm
Capacity:
70L Main Oven, 38L Top Oven

Energy efficiency: AA
Colour:
Fingerprint Free Stainless Steel

BDO7402X

90cm Built-in Double Fan Oven

MAIN FEATURES

Design
Contemporary exclusive design with stainless steel panel

LED Timer
Fully programmable LED timer allows you to pre-set your oven

Ease of cleaning
Easy-clean and removable door

GENERAL FEATURES

- Fan main oven and Static top oven
- Tilted grill for easy cleaning
- Large viewing window and interior light for the main oven
- Diamond quality easy clean enamel oven interior

Dimensions:
H:89cm W:59.4cm D:56.7cm
Capacity:
75L Main Oven, 38L Top Oven

Energy efficiency: AA
Colour: Stainless Steel

BIO7402X

72cm Built-under Double Fan Oven

MAIN FEATURES

Design
Contemporary exclusive design with stainless steel panel

LED Timer
Fully programmable LED timer allows you to pre-set your oven

Ease of cleaning
Easy-clean removable door glass

GENERAL FEATURES

- Fan main oven and Static top oven
- Tilted grill for easy cleaning
- Large viewing window and interior light for the main oven
- Diamond quality easy clean enamel oven interior

Dimensions:
H:71.5cm W:59.4 D:56.7
Capacity:
48L Main Oven, 38L Top Oven

Energy efficiency: AA
Colour: Stainless Steel

BEO9414X

60cm Built-in Single Fan Oven

MAIN FEATURES

Design
Modern design with push in pop out control knobs

LED Timer
Fully programmable LED timer allows you to pre-set your oven

Catalytic Liners
Catalytic liners on the back-wall and removable glass door for easy cleaning

GENERAL FEATURES

- Full-width variable grill with recessed grill element
- Maximum oven visibility - large viewing window and interior light
- Easy clean enamel
- Full-size enamel cooking tray with internal grill rack

Dimensions:
W:59.5cm H:59.4cm D:56.7cm
Capacity: 71L

Energy efficiency: A
Colour:
Fingerprint-free Stainless Steel

BUILT-IN OVENS

BE07402X

60cm Built-in Single Fan Oven

MAIN FEATURES

Design
Contemporary exclusive design with stainless steel panel

LED Timer
Fully programmable LED timer allows you to pre-set your oven

Maximum Oven Visibility
Large viewing window and interior light for the main oven

GENERAL FEATURES

- Full-width variable grill functions with recessed grill element
- 5 different cooking function for versatility
- Easy clean, double-glazed oven door with full glass inner door
- Maximum oven visibility - large viewing window and interior light

Dimensions:
H:59.4cm W:59.5cm D:56.7cm
Capacity: 71L

Energy efficiency: A
Colour:
Fingerprint-free Stainless Steel

BUILT-IN HOBS

From professional chefs to those who are passionate about cooking, the benefits of the traditional gas cooking are a preferred way of cooking for many people.

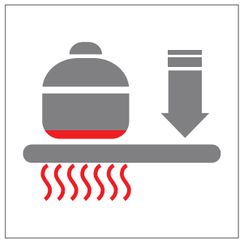

INDUCTION

Blomberg induction hobs are built with extra safety features that enable you to cook with ease. There are no open flames and it's only your pot that is heated up while cooking.

VITRO CERAMIC HOB

With Blomberg's neat hob design, the vitro ceramic hob will fit in perfectly with any kitchen style. The residual heat indicators will warn you if the hobs are too hot to be touched.

GAS

From professional chefs to those who are passionate about cooking, the benefits of the traditional gas cooking are a preferred way of cooking for many people.

FEATURES ON INDUCTION HOBS INCLUDE:

- **Intelligent Pan Size Recognition**
  Only the pan will be heated which will reduce wasted energy
- **Heat-up and Simmering**
  The hob operates and maximum power for instant heating, then lowers the power for simmering

FEATURES ON VITRO CERAMIC HOBS INCLUDE:

- **Residual Heat Indicators**
  Will warn you with a visible "H" sign that the cooking zone is not cold enough to touch safely

FEATURES ON GAS HOBS INCLUDE:

- **Flame Safety Device**
  Senses when there is no flame present and cuts off the gas

BUILT-IN GAS HOBS

Blomberg offers a range that will suit your preferred cooking method. The design of the range has been developed with care and detail to ensure the appliance will complement your built-in oven and any style of kitchen.

ELEGANT DESIGN

The Blomberg gas hobs match the knobs of the Blomberg ovens for a harmonious look in your kitchen.

PRACTICAL PAN SUPPORTS

Blomberg pan supports are cast iron finish* and have been designed to guarantee maximum stability and generous spacing between the burners. Their continuous straight design allows you to slide pots and pans from one burner to another very easily.

EASY TO CLEAN HOB SURFACE

Made as a single piece with easy clean rounded corners, these hobs are designed for quick and easy maintenance.

UNDER DIAL INSTANT IGNITION

With new and improved control knobs, the ignition is now quicker and easier. Simply press and turn the dial for instant auto ignition and you are ready to cook.

FLAME SAFETY DEVICE

For your total safety and peace of mind, the Blomberg gas hob has a 'flame safety device' fitted as standard. The device senses when the gas has gone out and automatically cuts off the gas.

*Features shown not available on all models.

BUILT-IN GAS HOBS

GEN53403E

60cm Front Control Gas Hob

MAIN FEATURES

- **Large Surface Gas Hob**
- **Easy-Grip Side-Control Knobs**
- **Ease-of-clean on an one-piece surface**

GENERAL FEATURES

- 4 Burners Gas Hob – 3 Different Sizes for Maximum Flexibility
- Auto ignition integrated into the knobs
- Matte enamel burner caps
- Matte enamel pan supports

Dimensions:
W:58cm H:5.1cm D:51cm
Colour: Stainless Steel

BUILT-IN ELECTRIC HOBS

With an easy-clean surface and precision-heat control, the stylish ceramic hob with bevelled edges will allow for more cooking flexibility and reduced cleaning time.

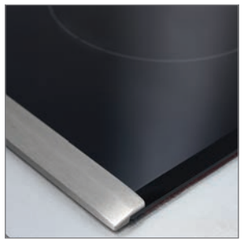

ELEGANT DESIGN

Blomberg ceramic hobs feature a scratch-resistant easy-clean surface. Stainless steel front and back frames on some models, fully-framed models and bevelled side-edges to withstand daily use, further enhancing the appearance and functionality of your kitchen.

EASY TO USE CONTROL PANEL

Touch-control Blomberg ceramic hobs allow you to set precise temperature and settings. Each heating zone is also operated by a separate touch point meaning they can be individually and easily regulated.

TIMER

The timer allows you to set a cooking time for each cooking zone separately. When the cooking time is up, the hob will automatically switch off the zone and a buzzer will signal the end of cooking.

ANTI-OVERFLOW SYSTEM

Automatically shuts off the power in case of liquid boiling over onto the control panel. Also, the hob will automatically switch off if the zone is left on for a long period of time.

SAFETY FEATURE

The residual heat indicators will warn you with a visible “H” sign that the cooking zone is not cold enough to touch safely.

CHILD LOCK

The child lock will prevent accidental pressing of buttons that might change the cooking setting and temperature.

BUILT-IN ELECTRIC HOBS

MIN54306N

60cm Induction Hob

MAIN FEATURES

- **Induction Technology**
- **Touch Control Digital Display**
- **Anit-Over Flow System**

GENERAL FEATURES

- 1-9 adjustable power levels per zone
- Booster function for quick heating
- Child lock
- Frameless Border Ceramic Surface
- Digital display with timer and buzzer

Dimensions:
W:58cm H:5.5cm D:51cm
Colour:
Black

MKN24001X

60cm Side-control vitro-ceramic Hob

MAIN FEATURES

- **Stylish ceramic hob with bevelled edges and black glass fascia**
- **Easy-Grip Side-Control knobs**
- **Ease of Clean Surface**

GENERAL FEATURES

- 1 - 6 adjustable power levels per zone
- On/Off indicator light
- Vitro ceramic white glass hob
- Wipe-clean hob surface
- Residual heat indicator

Dimensions:
W:58cm H:5.5cm D:51cm
Colour:
Black

BUILT-IN REFRIGERATION

The Blomberg refrigeration range of built-in appliances has been developed to offer maximum performance, convenience and reliability.

FROST FREE*

Fan cooling removes the build up of ice and keeps the freezer dry.

ANTIBACTERIAL DOOR SEALS

For maximum hygiene, Blomberg fridge, freezer and fridge freezer door seals are covered with an antibacterial coating to eliminate bacteria.

SUPER FRESH ZONE*

Low temperature fridge drawer maintains the temperature just above freezing point, ideal for keeping meat and fish fresher for longer.

CHROME WINE RACK*

Convenient and stylish way to store bottles of wine and 2 litre soft drink bottles.

SLIDING CRISPER COVER*

Provides easy access when removing or placing food into the salad crisper.

FAST FREEZE*

Rapidly freeze fresh food to preserve the taste and nutrients.

*Features shown not available on all models.

BUILT-IN REFRIGERATION

KNM1561i

Built-in 50/50 Frost Free Combi Fridge Freezer

MAIN FEATURES

Frost Free
No manual defrosting and prevents ice building up and restricting valuable storage space

Super Fresh Zone
Low temperature fridge drawer, ideal for safely storing fresh meat and fish

Antibacterial Door Seals
Helps to prevent bacteria from forming and entering the fridge

GENERAL FEATURES

- Chrome Wine Rack
- Silver Trims On The Door Racks
- Reversible Doors
- Sliding Hinges

Dimensions:
W:54cm H:177cm D:53.5cm
Capacity: 217L
(155L fridge, 62L: freezer)

Energy efficiency: A+

KNM1551i

Built-in 70/30 Frost Free Combi Fridge Freezer

MAIN FEATURES

Frost Free
No manual defrosting and prevents ice building up and restricting valuable storage space

Chrome Wine Rack
Convenient and stylish way to store bottles of wine and 2 litre soft drink bottles.

Antibacterial Door Seals
Helps to prevent bacteria from forming and entering the fridge

GENERAL FEATURES

- Chrome Coated Bottle Retainer
- Reversible Doors
- Silver Trims On The Door Racks
- Sliding Hinges

Dimensions:
W:54cm H:177cm D:53.5cm
Capacity: 238L
(190L fridge, 48L: freezer)

Energy efficiency: A+

TSM1750u

Built-in Undercounter Larder Fridge

MAIN FEATURES

Sliding Crisper Cover
Provides easy access when removing or placing food into the salad crisper

Antibacterial Door Seals
Helps to prevent bacteria from forming and entering the fridge

Adjustable Glass Shelves
Flexibility to change shelf height, useful when storing tall items

GENERAL FEATURES

- Half-depth Glass Shelf
- Heavy-duty Metal Hinges
- Reversible Door

Dimensions:
W:59.8cm H:82cm D:54.5cm
Capacity: 128L

Energy efficiency: A+

FSE1630u

Built-in Undercounter Freezer

MAIN FEATURES

High Temperature Warning
The red light will alert you if the freezer temperature starts to rise

Handy Door Rack
Convenient storage location to place your most commonly used items

Fast Freeze
Rapidly freeze fresh food to preserve the taste and nutrients

GENERAL FEATURES

- Concealed Storage Compartment
- Heavy Duty Metal Hinges
- Clear Freezer Fronts
- Reversible Door
- Manual Defrost

Dimensions:
W:59.8cm H:82cm D:54.5cm
Capacity: 87L

Energy efficiency: A+

BUILT-IN WASHING MACHINE

Combining great performance with style, the Blomberg integrated washing machine has been designed for modern living.

DESIGNED TO SAVE YOU TIME

Wash a full load in only 39 minutes
Wash a small load (2kg) in just 14 minutes

LARGE CAPACITY

The large 8kg capacity allows you to wash more in one go, saving you time and money

ENERGY EFFICIENCY

Blomberg washing machine has been designed to achieve outstanding fabric care and wash results using the least possible amount of detergent, water and electricity.

AQUAVOID

Anti-leak system designed to protect your home against flooding.

DURABLE HEATER

Special nickel-coated heater is a hundred times more durable than regular heaters. Thus, it prolongs the life of your washing machine.

QUALITY TESTED

For long life expectancy, we test 100% of our washing machines before they leave our factory.

BUILT-IN WASHING MACHINE

LWI842

Integrated 8kg Capacity Washing Machine with A++ Energy Rating

MAIN FEATURES

Large 8kg Capacity
Wash more in one go, saving you time and money

High Energy Efficiency: A++ Rating
Maximum performance with minimum energy consumption

Fast Full Load
Wash a large 8kg load in only 39 minutes

GENERAL FEATURES

- Automatic Water Level Reduction
- Mini 14 Programme
- Interactive LCD Display
- 16 Programmes
- Large 30cm Porthole

Dimensions:
W:60cm H:82cm D:55cm
Capacity: 8kg
Spin Speed: 1400rpm

Energy efficiency: A+
Colour: White

BUILT-IN WASHER DRYER

Incorporating the latest technologies that deliver outstanding results with optimum use of energy and water, the new Blomberg washer dryer will help you save previous time as well as money on utility bills.

OPTIMA INVERTER MOTOR

Provides a quieter and more efficient operation and it comes with 10 year warranty for extra peace of mind.

DESIGNED TO SAVE YOU TIME

The quick washing programmes and wash & dry programmes are a perfect solution for when you're in a hurry

Wash & Dry up to 5 shirts in 60 minutes
Wash a full 8kg load in 28 minutes

LOWEST WATER CONSUMPTION

With one of the lowest water consumptions on the market, this washer dryer helps you save a significant amount of water every year, helping you save money on your utility bills.

LARGE CAPACITY (8KG WASHING / 5 KG DRYING)
Save time by doing fewer loads

ENERGY EFFICIENT
Maximum performance with A rated energy efficiency

WASH THROUGH DRY PROGRAMMES FOR MAXIMUM CONVENIENCE
Ready to wear clothes with the specifically designed wash through dry programmes or by applying the drying function to

BUILT-IN WASHER DRYER

LRI285410

8/5kg Washer Dryer with 1400 spin speed

MAIN FEATURES

Hygiene+ Wash & Dry programme
Specifically designed for people with sensitive skin or allergy sufferers. Endorsed by Allergy UK.

LED display
Keeps you informed of the status of each cycle

High spin speed
Saves time and money while drying

GENERAL FEATURES

- Mini 14 programme – wash 2kg in 14 min
- 24 hr time delay
- Automatic Water Level Reduction
- Extra Large 34cm Door
- 16 programmes

Dimensions:
W:60cm H:82cm D:54cm
Capacity: 8/5kg
Spin Speed: 1400

Energy efficiency: A
Colour: White

BUILT-IN DISHWASHERS

Designed to provide high quality and performance, the Blomberg dishwashers are packed with special programmes, great features and storage solutions that will help you save time and money.

OPTIMA INVERTER MOTOR

The advanced brushless motor provides a quieter and more efficient operation and it comes with 10-year warranty for extra peace of mind.

ENERGY EFFICIENCY

A++ rated for energy efficiency, built-in dishwashers provide maximum performance with minimum energy consumption.

ADDITIONAL CUTLERY TRAY*

Comes in handy when you have extra cutlery to wash or if you need to free up the space in the bottom basket to load larger items.*

BASKET FLEXIBILITY

The height of the upper basket can be adjusted to make room for larger items in the bottom basket.

AUTO SENSE*

The auto programme adjusts the washing settings to the level of soil on the dishes, providing outstanding performance while using the optimum amount of water and energy.

QUALITY TESTED

For long life expectancy, we test 100% of our washing machines before they leave our factory.

*Features shown not available on all models.

BUILT-IN DISHWASHERS

LDVN2284

Full-size Integrated Dishwasher with A++ Energy Rating

MAIN FEATURES

Additional Cutlery Tray
Comes in handy when you have extra cutlery to wash or if you need to free up the space in the bottom basket to load larger items

High Energy Efficiency: A++ Rating
Maximum performance with minimum energy consumption

Optima Inverter Motor
Provides a quieter and more efficient operation and it comes with a 10-year warranty for extra peace of mind

GENERAL FEATURES

- Auto Programme
- Height Adjustable Basket
- Rapid Clean Function
- SuperGloss Function
- Digital Display

Dimensions:
W:60cm H:82cm D:55cm
Noise Level: 43dB
Water consumption: 10L

Energy efficiency: A+
Place Settings: 13
Colour: White

LDVS2284

Slimline Integrated Dishwasher with A++ Energy Rating

MAIN FEATURES

High Energy Efficiency: A++ Rating
Maximum performance with minimum energy consumption

Optima Inverter Motor
Provides a quieter and more efficient operation and it comes with a 10-year warranty for extra peace of mind

Auto Programme
Adjusts the washing parameters to the dirtiness of the load – saving you money by using the optimum amount of energy and water

GENERAL FEATURES

- Express 58' Programme
- Height Adjustable Basket
- Rapid Clean Function
- SuperGloss Function
- Digital Display

Dimensions:
W:45cm H:82cm D:55cm
Noise Level: 46dB
Water consumption: 9L

Energy efficiency: A+
Place Settings: 10
Colour: White

TECHNICAL DETAILS

FREESTANDING REFRIGERATION
AMERICAN-STYLE AND MULTI-DOOR FRIDGE FREEZERS

MODEL CODE	KFD4952XD	KWD2330X	KND9920X
Type	Four Door Fridge Freezer	Side by Side Fridge Freezer	Three Door Fridge Freezer
CAPACITIES			
Total gross volume, lt / cu.ft	605/21.3	620/21.9	530/18.7
Total net volume, lt / cu.ft	530/18.7	544/19.2	516/18.2
Fridge net volume, lt / cu.ft	378/13.3	368/13	316/11.1
Flexi Zone volume, lt / cu.ft	-	-	50/1.8
Freezer net volume, lt / cu.ft	152/5.4	176/6.2	150/5.3
GENERAL FEATURES			
Frost Free	●	●	●
Active dual cooling system	●	●	●
LED display	●	●	●
Air flow cooling	●	●	●
Flexi Zone	-	-	●
FRIDGE FEATURES			
Quick cool function	●	●	●
0-3°c Super Fresh Zone	●	●	-
Blue light technology	●	-	●
Number of glass shelves	3	4	3
Number of door racks	6	5	3
Number of crispers	2	2	1
Wine Rack	-	●	●
Odour filter	●	●	●
Chilled water dispenser (plumbing required)	●	●	-
LED lighting	●	●	●
FREEZER FEATURES			
Star rating	4	4	4
Fast Freeze function	●	●	●
Frost Free	●	●	●
Number of drawers	2	2	2
Number of glass shelves	-	5	-
Automatic Ice maker (plumbing required)	●	●	-
LED lighting	-	●	-
HYGIENE			
Odour filter	●	●	●
Antibacterial door seal	●	●	●
PERFORMANCE			
Energy efficiency class	A+	A+	A+
Climate class	SN/T	SN/T	SN/T
Energy consumption, kWh/year	452	471	428
Cooling gas	R600a	R600a	R600a
TECHNICAL INFORMATION			
Supply voltage, V/Hz	230 / 50	230 / 50	230 / 50
Noise level, dBA	42	43	46
Freezing capacity, kg/24 h	10	13	7
Temperature rise time, h	22	9	16
DIMENSIONS*			
Product dimensions (HxWxD), cm - including handles	1820x840x745	1790x910x730	1850x740x770
Packed dimensions (HxWxD), cm	1910x910x775	1897x977x776	1926x813x839
BUILD DETAILS			
Reversible doors	N/A	N/A	N/A
Wheels	Front and rear	Front and rear	Front and rear
Handle type	Metal	Metal	Metal
COLOUR OPTIONS			
Stainless steel	●	●	●

* Dimensions include any protruding features such as handles, knobs and bowed doors.

FREESTANDING REFRIGERATION
COMBI FRIDGE FREEZERS

MODEL CODE	KGM9691	KGM9681	KGM9550P	KGM9530P
Type	Combi Fridge Freezer	Combi Fridge Freezer	Combi Fridge Freezer	Combi Fridge Freezer
CAPACITIES				
Total gross volume, lt / cu.ft	400/14.1	357/12.6	300 / 10.5	240/8.5
Total net volume, lt / cu.ft	348/12.3	318/11.2	244 / 8.6	197/6.9
Fridge net volume, lt / cu.ft	230/8.1	189/6.7	157 / 5.5	134/4.7
Freezer net volume, lt / cu.ft	118/4.2	129/4.5	87 / 3.1	63/2.2
GENERAL FEATURES				
Frost Free	●	●	●	●
Food protector technology	●	●	●	●
FRIDGE FEATURES				
Defrost Method	Auto Defrost	Auto Defrost	Auto defrost	Auto Defrost
Number of glass shelves	4	3	4	3
Wine Rack	●	●	●	-
Number of door racks	3	3	3	3
Chrome coated bottle retainer	●	●	-	-
Number of crispers	2	1	1	1
Dairy Compartment	-	●	●	●
Open door alarm	-	●	-	-
Interior light	LED	LED	Bulb	Bulb
FREEZER FEATURES				
Star rating	4	4	4	4
Number of drawers	3	4	3	2
Number of flaps	1	-	1	1
Twist & serve ice cube makers	●	-	-	-
Slimline ice tray	-	●	●	●
HYGIENE				
Antibacterial door seal	●	●	●	●
PERFORMANCE				
Energy efficiency class	A+	A+	A+	A+
Climate class	SN/T	SN/T	SN/T	SN/T
Energy consumption, kWh/year	336	355	299	243
Cooling gas	R600a	R600a	R600a	R600a
TECHNICAL INFORMATION				
Supply voltage, V/Hz	230 / 50	230 / 50	230 / 50	230 / 50
Noise level, dBA	43	43	43	41
Freezing capacity, kg/24 h	6	5	4	3.5
Temperature rise time, h	18	21	13	14
DIMENSIONS*				
Product dimensions (HxWxD), mm	1900x700x600	1910x595x650	1820x545x600	1520x545x600
Packed dimensions (HxWxD), mm	1980x665x660	1989x665x739	1890x575x680	1595x576x630
BUILD DETAILS				
Reversible doors	●	●	●	●
Door hinge	Right hand side	Right hand side	Right hand side	Right hand side
Handle type	External	External	External	External
Adjustable front feet	●	●	●	●
COLOUR OPTIONS				
White	KGM9691	KGM9681	KGM9550P	KGM9530P
Stainless steel	KGM9691X	KGM9681X	-	-

* Dimensions exclude any protruding features such as handles, knobs and bowed doors.

FREESTANDING REFRIGERATION
TALL LARDER FRIDGES AND FREEZERS

MODEL CODE	SOM9673P	SSM9450	FNT9673P	FNT9550
Type	Tall Larder Fridge	Tall Larder Fridge	Tall Freezer	Tall Freezer
CAPACITIES				
Total gross volume, lt / cu.ft	415/14.6	260/9.2	290/10.2	171/6
Total net volume, lt / cu.ft	367/12.9	249/8.8	250/8.8	157/5.6
Fridge net volume, lt / cu.ft	367/12.9	249/8.8	-	-
Freezer net volume, lt / cu.ft	-	-	250/8.8	157/5.7
FRIDGE FEATURES				
Defrost Method	Auto Defrost	Auto Defrost	-	-
Dairy compartment	●	●		
0-3°C super fresh zone	●	-	-	-
Number of glass shelves	5	5	-	-
Wine Rack	●	●	-	-
Number of door racks	4	5	-	-
Chrome coated bottle retainer	●	-	-	-
Number of crispers	1	1	-	-
Interior light	LED	Bulb	-	-
FREEZER FEATURES				
External LED display	-	-	●	-
Food protector technology	-	-	●	●
Star rating	-	-	4	4
Fast Freeze function	-	-	●	●
Frost Free	-	-	●	●
High temperature warning	-	-	●	●
Number of drawers	-	-	5	4
Number of flaps	-	-	2	1
Twist & serve ice cube maker	-	-	●	-
Slimline ice tray	-	-	-	●
HYGIENE				
Antibacterial seal	●	●	●	●
PERFORMANCE				
Energy efficiency class	A+	A+	A+	A+
Climate class	SN/T	SN/T	SN/T	SN/T
Energy consumption, kWh/year	145	132	310	242
Cooling gas	R600a	R600a	R600a	R600a
TECHNICAL INFORMATION				
Supply voltage, V/Hz	230/50	230/50	230/50	230/50
Noise level, dBA	39	38	42	45
Freezing capacity, kg/24 h	-	-	16	10
Temperature rise time, h	-	-	18	17
DIMENSIONS*				
Product dimensions (HxWxD), mm	1714X600X650	1456X545X595	1714x600x650	1456x545x595
Packed dimensions (HxWxD), mm	1800X665X730	1525X580X669	1800X665X730	1525X580X669
BUILD DETAILS				
Reversible doors	●	●	●	●
Adjustable front feet	●	●	●	●
Handle type	Easy Open - External	External	Easy Open - External	External
COLOUR OPTIONS				
White	●	●	●	●

* Dimensions exclude any protruding features such as handles, knobs and bowed doors.

FREESTANDING REFRIGERATION
UNDERCOUNTER LARDERS, FRIDGES AND FREEZERS

MODEL CODE	TSM1551P	TSM1541P	FNE1531P
Type	Undercounter Larder Fridge	Undercounter Fridge with 4 Star Freezer	Undercounter Frost Free Freezer
CAPACITIES			
Total gross volume, cu.ft / lt	135 / 4.8	120 / 4.2	90 / 3.2
Total net volume, cu.ft / lt	130 / 4.6	114 / 4.0	75 / 2.6
Fridge net volume, cu.ft / lt	130 / 4.6	101 / 3.5	-
Freezer net volume, cu.ft / lt	-	13 / 0.5	75 / 2.6
FRIDGE FEATURES			
Defrost Method	Auto Defrost	Auto Defrost	-
Number of glass shelves	4	3	-
Number of door racks	3	3	-
Dairy compartment	●	●	-
Chrome coated bottle retainer	●	●	-
Number of crispers	1	1	-
Interior light	Bulb	Bulb	-
FREEZER FEATURES			
Star rating	-	4	4
Food protector technology	-	-	●
Defrost Method	-	Static	Frost Free
Number of drawers	-	-	2
Number of flaps	-	-	1
Fast Freeze setting	-	-	●
Slimline ice tray	-	-	●
HYGIENE			
Antibacterial seal	●	●	●
PERFORMANCE			
Energy efficiency class	A+	A+	A+
Climate class	SN-T	SN	SN-T
Energy consumption, kWh/year	116	169	184
Cooling gas	R600a	R600a	R600a
TECHNICAL INFORMATION			
Supply voltage, V/Hz	230 / 50	230 / 50	230 / 50
Noise level, dBA	42	40	43
Freezing capacity, kg/24 h	-	2	10
Temperature rise time, h	-	10	10.5
DIMENSIONS*			
Product dimensions (HxWxD), mm	850x545x600	850x545x600	850x545x600
Packed dimensions (HxWxD), mm	885x575x665	885x575x665	885x575x665
BUILD DETAILS			
Reversible door	●	●	●
Door hinge	Right hand side	Right hand side	Right hand side
Adjustable front feet	●	●	●
Handle type	External	External	External
COLOUR OPTIONS			
White	●	●	●

* Dimensions exclude any protruding features such as handles, knobs and bowed doors.

FREESTANDING WASHING MACHINES

MODEL CODE	LWF29441W	LWF28441	LWF27441	WNF63211	WNF5200
Type	Freestanding Washing Machine	Freestanding Washing Machine	Freestanding Washing Machine	Freestanding Washing Machine	Freestanding Washing Machine
MAIN FEATURES					
Load capacity, kg	9	8	7	6	6
Drum volume, lt	64	55	50	44	44
Control type	Digital display	Digital display	Digital display	Digital display	LED
Maximum spin speed, rpm	1400	1400	1400	1200	1000
Time delay	0-24h	0-24h	0-24h	0-19h	3h,6h,9h
Optima Inverter Motor	●	●	●	-	-
Remaining time	●	●	●	●	-
Automatic water adjustment system	●	●	●	●	●
Durable heater	●	●	●	●	-
Drum material	Stainless steel	Stainless steel	Stainless steel	Stainless steel	Stainless steel
Porthole diameter, cm	34	34	34	30	30
Door opening angle	170	170	170	155	155
Door hinge	Left hand side	Left hand side	Left hand side	Left hand side	Left hand side
Cold fill	●	●	●	●	●
PROGRAMMES					
Number of programmes	16	16	16	15	11
Delicates 20°	●	●	●	-	-
Hygiene+	●	●	●	-	-
Rinse	●	●	●	●	●
Spin&Drain	●	●	●	●	●
Cottons	●	●	●	●	●
Cottons Eco	●	●	●	●	●
Synthetics	●	●	●	●	●
Woollens	●	●	●	●	●
Hand Wash	●	●	●	●	●
Fast Full Load	●	●	●	●	-
Mini 14	●	●	●	●	●
Dark Wash	●	●	●	●	●
Mix 40	●	●	●	●	-
Shirts	●	●	●	●	●
Sports	●	●	●	●	●
Duvet	●	-	-	-	-
Jeans	-	●	●	-	-
Delicates	-	-	-	●	-
Hygiene	-	-	-	●	-
FUNCTIONS					
Rinse Plus	●	●	●	-	-
Shorter Wash	●	●	●	●	●
Pre-Wash	●	●	●	●	●
Rinse Hold	●	●	●	●	●
No spin	●	●	●	●	●
Pet Hair Removal	-	-	-	●	-
SAFETY					
aquAvoid	●	●	●	●	●
Child lock	●	●	●	●	●
Door lock	●	●	●	●	●
No water warning indicator light	●	●	●	●	-
PERFORMANCE					
Energy efficiency class	A+++	A+++	A+++	A++	A+
Washing performance	A	A	A	A	A
Spin performance	B	B	B	B	C
Energy consumption (Cotton 60°), kWh	0.94	1.2	0.97	0.85	0.74
Water consumption (Cotton 60°), lt	49	48	41	40	33
Annual energy consumption, kWh/Year	194	196	169	164	158
Annual water consumption, lt/Year	10780	10560	9020	8800	7260
Standard cycle duration (Cotton 60°), min	225	235	208	185	159
Noise levels (washing and spinning), dBA	53/78	56/77	54/75	59/72	59/72
Remaining moisture, %	53	53	53	53	62
TECHNICAL INFORMATION					
Supply voltage, V/Hz	230 / 50	230 / 50	230 / 50	230 / 50	230 / 50
Total power, W	2200	2200	2200	2200	2200
Amperage, A	10	10	10	10	10
Drain Hose Connection height	40-100 cm	40-100 cm	40-100 cm	40-100 cm	40-100 cm
Water pressure range, bar	1-10	1-10	1-10	1-10	1-10
Water connection	Cold	Cold	Cold	Cold	Cold
CE / VDE approval	●	●	●	●	●
DIMENSIONS*					
Product dimensions (HxWxD), cm	84x60x60	84x60x54	84x60x50	85x60x47	85x60x47
Packed dimensions (HxWxD), cm	88x65x66	88x65x60	88x65x56	88x65x52.5	89x65x52.5
Unpacked weight, kg	75	73	71	62	59
Packed weight, kg	76	74	72	63	60
COLOUR OPTIONS					
White	●	●	●	●	●

* Dimensions exclude any protruding features such as handles, knobs and bowed doors.

FREESTANDING WASHER DRYER

MODEL CODE	LRF285411W
Type	Freestanding Washer Dryer
MAIN FEATURES	
Load capacity - washing kg	8
Load capacity - drying kg	5
Maximum spin speed, rpm	1400
Energy Rating	A
Drum volume, lt	55
Control type	Digital Display
Time delay	up to 24hr
Remaining time	●
Automatic water adjustment system	●
Durable heater	●
Drum material	Stainless steel
Porthole diameter, cm	34
Door opening angle	165
Door hinge	Left hand side
Cold fill	•
PROGRAMMES	
Number of programmes	16
Wash&Wear	●
5kg Wash&Dry	●
Hygiene+ Wash&Dry	●
Synthetic Dry	●
Cotton Dry	●
Fast Full load	●
Mini 14'	●
Hand wash	●
Woollens	●
Synthetics	●
Cottons eco	●
Cottons	●
Delicates	●
Shirts	●
Rinse	●
Spin + Pump	●
FUNCTIONS	
Prewash	●
Shorter wash	●
Rinse Plus	●
Drying	●
No spin	●
Rinse Hold	●
SAFETY	
aquAvoid	●
Child lock	●
Door lock	●
PERFORMANCE	
Energy efficiency class	A
Washing performance	A
Spinning performance	A
Total (Washing+Drying) Energy Consumption (kWh)	5.44 kWh
Washing Energy Consumption (kWh)	0.76 kWh
Total (Washing+Drying) Water Consumption (l)	78.0 l
Washing Water Consumption (only full load washing) (l)	47 l
Total annual energy consumption (200 cycles- full loads washing and drying) (kWh)	1088 kWh
Total annual water consumption (200 cycles- full loads washing and drying) (l)	15600 l
Program time for full load washing (Cotton Eco 60 C) (min)	265 min
Program time for full load drying (Cotton)	190 min
Noise levels (washing / spinning / drying) dB	59/76/63
TECHNICAL INFORMATION	
Supply voltage, V/Hz	220-240 / 50
Total power, W	2000-2350
AMPERAGE, A	10
Water Connection height	40-90 cm
Water pressure range, bar	1-10
Water connection	Single (cold10)
Cable length, cm	170
CE / VDE approval	•
DIMENSIONS*	
Product dimensions (HxWxD), mm	850x600x540
Packed dimensions (HxWxD), mm	890x650x600
Unpacked weight, kg	73
Packed weight, kg	74
COLOUR OPTIONS	
White	●

* Dimensions exclude any protruding features such as handles, knobs and bowed doors.

FREESTANDING TUMBLE DRYERS

MODEL CODE	LTS2832	LTK2802	TKF7431
Type	Heat Pump Dryer	Condenser Dryer	Condenser Dryer
MAIN FEATURES			
Load capacity, kg	8	8	7
Drum volume, lt	118	118	102
Control type	Digital Display	Digital Display	LCD Display
Time delay	24 hr	24 hr	24 hr
Auto Cooldown Phase	●	●	●
Child Lock Feature Operated Electronically	●	●	●
Reverse Action (Bi-directional drum action)	●	●	●
Adjustable front feet	●	●	●
Large Porthole Door	●	●	●
Reversible Door	●	●	-
Direct Drain hose supplied with the product	●	●	●
Easy Access Filter Positioned Conveniently	●	●	●
Start/Pause cancel Button	●	●	●
Can be installed under worktop	●	●	●
High Quality Condenser Unit	●	●	●
Door type	Glass-reversible	Glass-reversible	Opaque - ireversible
Door opening,°	178	150	150
PROGRAMMES			
Number of programmes	16	16	16
Wool refresh	-	-	●
Refresh	●	●	●
Delicates	●	●	●
Jeans	●	●	●
Sportswear	●	●	●
Shirts 15'	●	●	●
Shirts	-	-	●
Baby protect	●	●	●
Mix	-	-	●
Cottons Iron Dry	●	●	●
Cottons Cupboard Dry	●	●	●
Cottons Extra Dry	●	●	●
Synthetics Iron Dry	●	●	●
Synthetics Cupboard Dry	●	●	●
Timed programmes	●	●	●
SAFETY			
End of cycle buzzer	●	●	●
Child lock	●	●	●
Clean filter	●	●	●
Water-tank full	●	●	●
PERFORMANCE			
Energy efficiency class	A++	B	B
Energy consumption, kWh	1.92	4.73	4.15
Standard cycle duration, min	179	137	121
Annual energy consumption (KWH)	230	561	504
TECHNICAL INFORMATION			
Supply voltage, V/Hz	230-240/50	230-240/50	230-240/50
Total maximum power, W	900	2700	2700
Amperage, A	10	10	10
Cable length, m	1.5	1.5	1.5
Noise level, dBA	65	66	66
CE / VDE approval	●	●	●
DIMENSIONS*			
Product dimensions (HxWxD), mm	85x60x61	85x60x61	85x60x54
Packed dimensions (HxWxD), mm	88.5x65x66.5	88.5x65x66.5	88x65x60
Unpacked weight, kg	51	40	36
Packed weight, kg	52	42	38
COLOUR OPTIONS			
White	●	●	●

* Dimensions exclude any protruding features such as handles, knobs and bowed doors.

FREESTANDING DISHWASHERS

MODEL CODE	LDFN2240W	GSC9124	LDFS1110W
Type	Full Size Freestanding Dishwasher	Full Size Freestanding Dishwasher	Slim Size Freestanding Dishwasher
MAIN FEATURES			
Place settings	13	12	10
Control type	Button & LCD display	Knob & LED	Button & LED Display
Time delay	24 hr	-	3-6-9 hr
Programme follower	●	●	●
Drying system	Active Ventilation	Static	Hot Air Drying
Salt and rinse aid indicators	●	●	●
Cold fill	●	●	●
PROGRAMMES			
Number of programmes	8	5	5
Prewash	●	✍	✍
Mini 30'	●	●	●
Eco 50°	●	●	●
Express 58'	●	●	●
Intensive 70°	●	●	●
Auto 40-65	●	-	-
MixWash+ Duration (min)	●	-	-
GlassCare (40°C) Duration (min)	●	-	-
Daily (65°C) Duration (min)	-	●	●
SPECIAL FUNCTIONS			
Half load	●	●	●
Time delay	●	-	●
Extra Rinse	-	-	●
Rapid Clean	●	-	-
IntenseWash	●	-	-
Super Gloss	●	-	-
INTERIOR DESIGN			
smartRACK, loaded height adjustable upper basket	●	-	-
Unloaded height adjustable upper basket	✍	●	●
Height adjustable shelves for mugs	●	●	-
Foldable plate supports in the lower basket	●	-	●
Foldable cut supports in the upper basket	●	-	-
Cutlery basket	●	●	●
Additional Cutlery tray	●	✍	✍
Metal filter	●	●	●
SAFETY			
aquAvoid™	-	●	-
aquAvoid™ plus	●	-	●
Antibacterial seal	●	-	-
PERFORMANCE			
Energy efficiency class	A++	A+	A+
Cleaning performance	A	A	A
Drying performance	A	A	A
Water consumption, lt	10	15	13
Energy consumption, kWh	0.92	1.02	0.83
Annual energy consumption, kWh/year	262	290	237
Annual water consumption, kWh/year	2800	4200	3640
Noise level, dBA	43	49	49
TECHNICAL INFORMATION			
Supply voltage, V/Hz	220-240 / 50	220-240 / 50	220-240 / 50
Total power, W	1900-2200 W	1900-2200 W	1900-2200 W
Amperage, A	10	10	10
Water pressure range, bar	0.3-10	0.3-10	0.3-10
Water Connection height	50 -100 cm	50 -100 cm	50 -100 cm
CE / VDE approval	●	●	●
DIMENSIONS*			
Product dimensions (HxWxD), mm	850x598x600	850x598x600	850x448x500
Packed dimensions (HxWxD), mm	890x644x661	890x644x661	890x494x661
Height without worktop, cm	82	82	82
Feet adjustable by, cm	1.5	1.5	1.5
Unpacked weight, kg	46	38.5	40.5
PACKED WEIGHT, KG	49	41.5	43
COLOUR OPTIONS			
White	●	●	●

* Dimensions exclude any protruding features such as handles, knobs and bowed doors.

FREESTANDING COOKERS

MODEL CODE	HKN60	GGN60
Type	60cm Electric Cooker	60cm Gas Cooker
HOB		
Adjustable Flame Settings	-	●
Adjustable Heat Settings	●	-
Cast Iron Pan Supports	-	●
Hob on indicator	●	-
Ignition	-	Mains - push button
Flame Safety Devices	-	On all burners
No. Of Burners / zones	4	4
Front left	1.7 KW	2.9 KW
Front right	1.2 KW	1 KW
Rear left	1.2 KW	2 KW
Rear right	1.7 KW	2 KW
TOP OVEN		
Energy Rating	A	A
Thermostatically Controlled	●	●
Grill	●	●
Grill Type	Full width	Full width
Open or Closed Door Grilling	Open	Open
Fully Variable Grill	●	-
Grill Pan with Internal Rack & handle	●	●
Oven Type	Conventional	Conventional
Volume (litres)	36	32
Door Type	Metal and glass	Metal and glass
Removable Door Glass	●	●
Door Opening	Drop down	Drop down
Interior Light	●	●
Easy clean enamel	●	●
Shelves	1	1
Shelf Positions	2	2
MAIN OVEN		
TIMER	Programmable LED	Programmable LED
Function	Fully programmable	Auto off
Energy Rating	A	A+
Thermostatically Controlled	●	●
Oven Type	Fan	Conventional
Volume (litres)	69	72
Door Type	Metal and glass	Metal and glass
Removable Door Glass	●	●
Door opening	Swing left	Swing left
Interior Light	●	●
Easy clean enamel	●	●
Self Clean catalytic liners	On back wall	-
Shelves	2	2
Shelf Positions	5	5
ACCESSORIES		
4 Adjustable Feet	●	●
Cooling Fan	●	●
COOKING FUNCTIONS		
Gas Cooking	-	●
Static Cooking	●	-
Fan Cooking	●	-
Grill Cooking	●	●
PERFORMANCE		
Energy efficiency class	A	A+
ENERGY CONSUMPTION		
Top oven consumption (kWh)	Conventional - 0.70	Conventional - 1.44
Main oven consumption (kWh)	Forced air - 0.88	Conventional - 1.50
TECHNICAL INFORMATION		
Supply voltage, V/Hz	220-240/50	220-240/50
Amperage, A	32amp	13amp
Gas power, W	-	12,700 W
Electric power, W	9,900 W	-
LPG Conversion Kit Available	-	●
DIMENSIONS		
Product dimensions (HxWxD), mm	900x600x600	900x600x600
Packed dimensions (HxWxD), mm	1025x660x700	1025x660x700
Unpacked weight, kg	62.9	64.3
Packed weight, kg	66	68
COLOUR OPTIONS		
White	HKN60W - White	-
Black	HKN60Z - Black	GGN60Z - Black

* Dimensions exclude any protruding features such as handles, knobs and bowed doors.

BUILT-IN OVENS

MODEL CODE	LDFN2240W	GSC9124	LDFS1110W
MODEL CODE	BDO9564X	BEO9566Z	BEO7402X
Type	Multifunction Double Oven	Single Fan Oven	Single Fan Oven
CONTROL TYPE			
Programmable animated LED display	-	-	-
Programmable digital display	-	●	●
Rotary control	●	-	-
Push-pop-out knobs	●	●	●
Electronic temperature control, 5°C sensitive	●	●	●
COOKING FUNCTIONS			
Number of cooking functions	8	12	5d
Bottom heater	●	-	-
Conventional	●	-	-
Conventional+fan	●	-	-
Fan cooking	Yes	Yes	Yes
3D	●	-	-
Low grill	●	-	-
Low grill+fan	-	-	-
Grill	●	●	●
Grill+fan	●	●	●
Slow cooking	●	-	-
Warm keeping	●	-	-
Defrost	●	●	●
Booster	-	-	-
Pizza	●	-	-
ADDITIONAL COOKING OPTIONS			
Booster, fast to-the-degree heating	●	-	-
Door closed grilling	●	●	●
Energy efficiency class	-	-	-
Cavity volume, lt	71	71	71
Smooth surface	●	●	●
Nano Coating Technology	-	-	-
Easy Clean™ grey enamel	●	●	●
Catalytic back wall	-	●	●
Catalytic side wall	●	-	-
Removable side racks	●	●	●
TOP OVEN			
Energy efficiency class	A	-	-
Cavity volume, lt	38	-	-
Grill Type	recessed grill integrated in the oven	-	-
Fully Variable Grill	●	-	-
Interior light	●	-	-
Drop down door	●	-	-
Easy Clean™ grey enamel	●	-	-
Smooth surface	●	-	-
LIGHTING			
Interior light	●	●	●
Light type	Square halogen	Cylindrical lamp	Cylindrical lamp
Number of lights	2	1	1
Oven light with door opening	●	●	●
OVEN DOOR			
Full width glass inner door	●	●	●
Removable door	●	●	●
Drop down door	●	●	●
SAFETY			
Key lock	●	●	●
ACCESSORIES			
Cooking tray	●	●	●
Baking tray	●	-	-
Wire shelf	●	●	●
Level of telescopic rack	-	-	-
PERFORMANCE			
TOTAL POWER, KW	5.5	2.3	2.3
Energy consumption:			
Conventional, kWh	0.88	-	-
Fan cooking, kWh	0.79	0.79	0.79
TECHNICAL INFORMATION			
Noise level, dBA	46	46	46
Supply voltage, V/Hz	220-240 / 50	220-240 / 50	220-240 / 50
Amperage, A	25	25	25
CE / VDE approved	●	●	●
DIMENSIONS*			
Product dimensions (HxWxD), mm	895x594x567	595x594x567	595x594x567
COLOUR OPTIONS			
Fingerprint free stainless steel	●	●	●

* Dimensions exclude any protruding features such as handles, knobs and bowed doors.

BUILT-IN GAS HOBS

MODEL CODE	GEN53403E
Type	Gas
Width, cm	60
CONTROL TYPE	
Front controls	●
BURNERS	
Number and type of burners	4 gas
Front left, W	1.75
Rear left, W	2.9
Front right, W	1
Rear right, W	1.75
FEATURES	
Burner caps	Enamel
Pan supports	Enamel
Electronic ignition integrated into the knobs	●
SAFETY	
Flame failure gas cut-out device	●
TECHNICAL INFORMATION	
Gas power, W	4700
Supply voltage, V/Hz	220-230 / 50
CE / EN30 approved	●
DIMENSIONS	
Product dimensions (HxWxD), mm	98x580x510
Niche dimensions (WxD), mm	560x490
Packed dimensions (HxWxD), mm	150x640x580
Unpacked weight Kg	8.1
Packed weight Kg	9.3
COLOUR OPTIONS	
Stainless steel	●

BUILT-IN ELECTRIC HOBS

MODEL CODE	MIN54306N	MKN24001X
Type	Induction	Vitro ceramic
Width, cm	60	60
CONTROL TYPE		
Touch sensitive front control	●	-
Side control	-	●
Separate touchpads	●	-
Digital display	●	-
Timer	●	-
ZONES		
Type of zones	Induction	Electric
Cooking levels per zone	9	9
Numbers of zones	4	4
Front left, mm - W	Ø180mm - 2000/2300W	Ø180mm - 1800
Rear left, mm - W	Ø180mm - 2000/2300W	Ø140mm - 1200W
Front right, mm - W	Ø145mm - 1600/1800W	Ø140mm - 1200W
Rear right, mm - W	Ø210mm - 2000/2300W	Ø140mm - 1200W
FEATURES		
Precise heat adjustment	Yes	Yes
On / off indicator	Yes	Yes
Booster, fast to-the-degree heating	Yes	Yes
Heat-up and simmering	Yes	Yes
SAFETY		
Child lock	Yes	Yes
Anti-over flow	Yes	Yes
Automatic stop system	Yes	Yes
Individual residual heat indicators	Yes	Yes
TECHNICAL INFORMATION		
Total power, W	182,77	197
Supply voltage, V/Hz	220-240 / 50	220-240 / 50
Amperage, A	32	32
CE / VDE approved	●	●
DIMENSIONS		
Product dimensions (HxWxD), mm	55x580x510	55x580x510
Niche dimensions (WxD), mm	560x490	560x490
Packed dimensions (HxWxD), mm	150x650x650	125x655x550
Unpacked weight Kg	10	18
Packed weight Kg	11	20
COLOUR OPTIONS		
Stainless steel frames	-	●
Black Ceramic frames	●	●

* Dimensions exclude any protruding features such as handles, knobs and bowed doors.

BUILT-IN REFRIGERATION
COMBI FRIDGE FREEZERS

MODEL CODE	KNM1551i	KNM1561i
Type	Combi Fridge Freezer	Combi Fridge Freezer
CAPACITIES		
Total gross volume, lt / cu.ft	280/9.9	230/8.1
Total net volume, lt / cu.ft	240/8.4	217/7.7
Fridge net volume, lt / cu.ft	190/6.7	155/5.5
Freezer net volume, lt / cu.ft	48/1.7	62/2.2
GENERAL FEATURES		
Frost Free	●	●
Food protector technology	●	●
FRIDGE FEATURES		
0-3°C super fresh zone	-	●
Number of door racks	4	3
Number of glass shelves	4	3
Wine rack	●	●
Chrome coated bottle retainer	●	●
Number of crispers	2	2
FREEZER FEATURES		
Star rating	4	4
Number of transparent drawers	2	3
Number of transparent flaps	1	1
Slimline ice tray	-	●
HYGIENE		
Antibacterial door seals	●	●
PERFORMANCE		
Energy efficiency class	A+	A+
Climate class	SN-T	SN-T
Energy consumption, kWh/year	274	275
Cooling gas	R600a	R600a
TECHNICAL INFORMATION		
Noise level, dBA	38	40
Supply voltage, V/Hz	230 / 50	230 / 50
Freezing capacity, kg/24h	2.5	3.5
Temperature rise time, h	13	13
DIMENSIONS		
Product dimensions (HxWxD), mm	1770x540x535	1770x540x535
Niche dimensions (HxWxD), mm	1789x560x550	1789x560x550
BUILD DETAILS		
Reversible door	●	●
Fixing system	Sliding hinges	Sliding hinges
COLOUR OPTIONS		
Fully integrated	●	●

* Dimensions exclude any protruding features such as handles, knobs and bowed doors.

BUILT-IN REFRIGERATION
UNDERCOUNTER FRIDGES AND FREEZERS

MODEL CODE	TSM1750u	FSE1630u
Type	Under Counter Fridge	Under Counter Freezer
CAPACITIES		
Total gross volume, lt / cu.ft	130/4.6	96/3.4
Total net volume, lt / cu.ft	128/4.5	87/3.1
Fridge net volume, lt / cu.ft	128/4.5	-
Freezer net volume, lt / cu.ft	-	87/3.1
FRIDGE FEATURES		
Defrost system	Auto defrost	-
Number of glass shelves	3	-
Chrome coated bottle retainer	●	-
Number of crispers	1	-
FREEZER FEATURES		
Star rating	-	4
Fast Freeze function	-	●
Defrost system	-	Static
Number of transparent drawers	-	3
High temperature warning light	-	●
Handy rack	-	●
HYGIENE		
Antibacterial door seals	●	●
PERFORMANCE		
Energy efficiency class	A+	A+
Climate class	SN-T	SN-T
Energy consumption, kWh/year	117	183
Cooling gas	R600a	R600a
TECHNICAL INFORMATION		
Noise level, dBA	39	42
Supply voltage, V/Hz	230 / 50	230 / 50
Freezing capacity, kg/24h	-	6
Temperature rise time, h	-	19
DIMENSIONS		
Product dimensions (HxWxD), mm	820x595x545	820x595x545
Niche dimensions (HxWxD), mm	820-870x600x550	820-870x600x550
BUILD DETAILS		
Reversible door	●	●
smartFIX, integrated hinges	●	●
COLOUR OPTIONS		
Fully integrated	●	●

* Dimensions exclude any protruding features such as handles, knobs and bowed doors.

BUILT-IN WASHING MACHINES

MODEL CODE	LWI842
Type	Integrated Washing Machine
MAIN FEATURES	
Load capacity, kg	8
Drum volume, lt	55
Control type	Interactive LCD Display
Maximum spin speed, rpm	1400
No spin	●
Time delay	up to 24hr
Remaining time	●
Automatic water adjustment system	●
Durable heater	●
Drum material	Stainless steel
Porthole diameter, cm	30
Door opening angle	135
Door hinge	Left hand side
Cold fill	●
PROGRAMMES	
Number of programmes	16
Hand wash	●
Dark wash	●
Woollens	●
Mini 14'	●
Cottons 20	●
Rinse	●
Spin + Pump	●
Synthetics	●
Cottons eco	●
Cottons	●
Intensive	●
Hygiene	●
Fast Full load	●
Machine care	●
Lingerie	●
Refresh	●
FUNCTIONS	
Prewash	●
Quick wash	●
Pet Hair reduction	●
Anti creasing	●
SAFETY	
aquAvoid	●
Child lock	●
Door lock	●
PERFORMANCE	
Energy efficiency class	A++
Washing performance	A
Spinning performance	A
Energy consumption (Cotton 60°), kWh	1.17
Water consumption (Cotton 60°), lt	50
Annual energy consumption, (200 cycles) kWh/Year	218
Annual water consumption, (200 cycles) kWh/Year	11000
Standard cycle duration (Cotton 60°), min	184
TECHNICAL INFORMATION	
Supply voltage, V/Hz	220-240 / 50
Total power, W	2200
Amperage, A	10
Water Connection height	40-100 cm
Water pressure range, bar	1-10
Water connection	Single (cold10)
Cable length, cm	170
CE / VDE approval	●
DIMENSIONS*	
Product dimensions (HxWxD), mm	820x600x540
Packed dimensions (HxWxD), mm	890x650x600
Unpacked weight, kg	71
Packed weight, kg	72
COLOUR OPTIONS	
White	●

* Dimensions exclude any protruding features such as handles, knobs and bowed doors.

BUILT-IN WASHER DRYERS

MODEL CODE	LRI285410
Type	Integrated Washer Dryer
MAIN FEATURES	
Load capacity - washing kg	8
Load capacity - drying kg	5
Maximum spin speed, rpm	1400
Energy Rating	A
Drum volume, lt	55
Control type	Digital Display
Time delay	up to 24hr
Remaining time	●
Automatic water adjustment system	●
Durable heater	●
Drum material	Stainless steel
Porthole diameter, cm	34
Door opening angle	165
Door hinge	Left hand side
Cold fill	●
PROGRAMMES	
Number of programmes	
Wash&Wear	●
5kg Wash&Dry	●
Hygiene+ Wash&Dry	●
Synthetic Dry	●
Cotton Dry	●
Fast Full load	●
Mini 14'	●
Hand wash	●
Woollens	●
Synthetics	●
Cottons eco	●
Cottons	●
Delicates	●
Shirts	●
Rinse	●
Spin + Pump	●
FUNCTIONS	
Prewash	●
Shorter wash	●
Rinse Plus	●
Drying	●
No spin	●
Rinse Hold	●
SAFETY	
aquAvoid	●
Child lock	●
Door lock	●
PERFORMANCE	
Energy efficiency class	A
Washing performance	A
Spinning performance	A
Total (Washing+Drying) Energy Consumption (kWh)	tbc
Washing Energy Consumption (kWh)	tbc
Total (Washing+Drying) Water Consumption (l)	tbc
Washing Water Consumption (only full load washing) (l)	tbc
Total annual energy consumption (200 cycles- full loads washing and drying) (kWh)	tbc
Total annual water consumption (200 cycles- full loads washing and drying) (l)	tbc
Program time for full load washing (Cotton Eco 60 C) (min)	tbc
Program time for full load drying (Cotton)	tbc
Noise levels (washing / spinning / drying) dB	tbc
TECHNICAL INFORMATION	
Supply voltage, V/Hz	220-240 / 50
Total power, W	2000-2350
Amperage, A	10
Water Connection height	40-90 cm
Water pressure range, bar	1-10
Water connection	Single (cold10)
Cable length, cm	170
CE / VDE approval	●
DIMENSIONS*	
Product dimensions (HxWxD), mm	820x600x540
Packed dimensions (HxWxD), mm	890x650x600
Unpacked weight, kg	73
Packed weight, kg	74
COLOUR OPTIONS	
White	●

* Dimensions exclude any protruding features such as handles, knobs and bowed doors.

BUILT-IN DISHWASHERS

MODEL CODE	LDVN2284	LDVS2284
Type	60cm Full size Integrated Dishwasher	45cm Slim size Integrated Dishwasher
MAIN FEATURES		
Place settings	13	10
Control type	Digital Display	Digital Display
Time delay	up to 24hr	up to 24hr
Programme follower	●	●
Turbo Fan Active Heat Drying System	●	-
Salt and rinse aid indicators	●	●
"Programme on" Floor indicator light	●	●
Cold fill	●	●
PROGRAMMES		
Number of programmes	9	9
ProClean	●	●
Prewash	●	●
Mini 30' 35°	●	●
Eco 50°	●	●
Express 58'	●	●
Intensive 70°	●	●
Glass Care 40°	●	●
MixWash+	●	●
Auto 40° - 65°	●	●
SPECIAL FUNCTIONS		
Half load	●	●
Time delay	●	●
Rapid Clean	●	●
IntenseWash	●	●
Extra Rinse	●	●
INTERIOR DESIGN		
smartRACK, loaded adjustable upper basket	●	●
Height adjustable shelves for mugs	●	●
Foldable plate supports in the lower basket	●	●
Foldable cut supports in the upper basket	●	-
Cutlery basket	●	●
Additional Cutlery tray	●	-
Metal filter	●	●
SAFETY		
aquAvoid™	●	●
Antibacterial seal	●	●
PERFORMANCE		
Energy efficiency class	A++	A++
Cleaning performance	A	A
Drying performance	A	A
Water consumption, lt	10	9
Energy consumption, kWh	0.92	0.74
Annual energy consumption, (220 cycles) kWh/year	262	211
Annual water consumption, (220 cycles) kWh/year	2800	2520
Noise level, dBA	43	46
TECHNICAL INFORMATION		
Supply voltage, V/Hz	220-240 / 50	220-240 / 50
Total power, W	1900-2200 W	1900-2200 W
Amperage, A	10	10
Water pressure range, bar	0.3-10	0.3-10
Cable length, cm	150	150
Water Connection height	50 -100 cm	50 -100 cm
CE / VDE approval	●	●
DIMENSIONS*		
Product dimensions (HxWxD), mm	820x598x550	820x448x550
Packed dimensions (HxWxD), mm	860x644x661	860x494x661
Height without worktop, cm	82	82
Feet adjustable by, cm	5	5
Furniture door weight	3 kg - 6 kg	2 kg -5.5 kg
Unpacked weight, kg	39	29.5
Packed weight, kg	42	32
COLOUR OPTIONS		
White	●	●

* Dimensions exclude any protruding features such as handles, knobs and bowed doors.

BUILT-IN DIAGRAMS

INSTALLATION DIAGRAMS

All measurements in (mm)

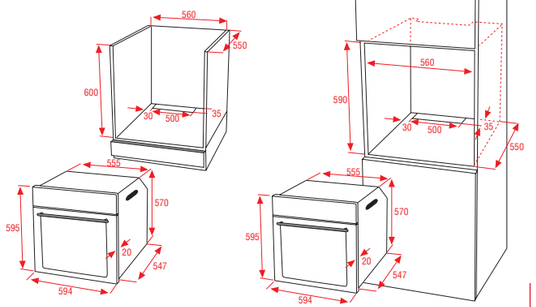

BUILT-IN SINGLE OVEN

BEO9414X BEO7402X

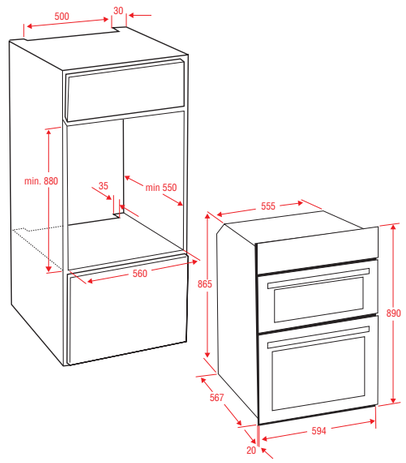

BUILT-IN DOUBLE OVEN

BDO9564X BDO7402X

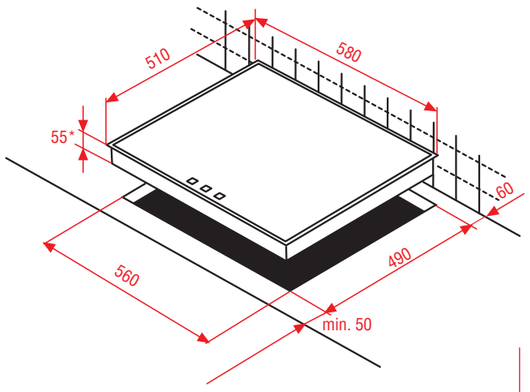

BUILT-IN ELECTRIC HOB

MIN54306N

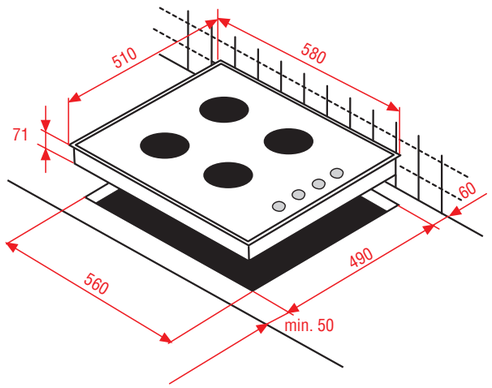

BUILT-IN ELECTRIC HOB

MKN24001X

* Dependent on model. Check technical details

INSTALLATION DIAGRAMS

All measurements in (mm)

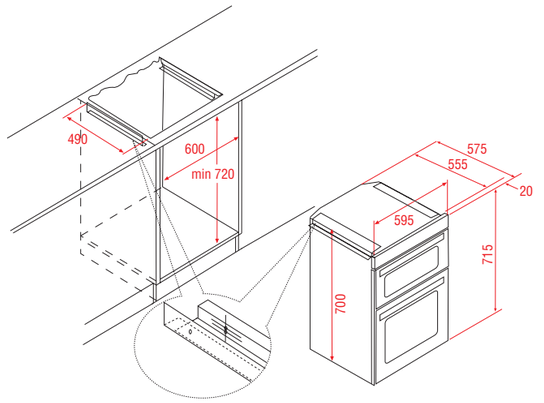

BUILT-IN DOUBLE OVEN

BIO7402X

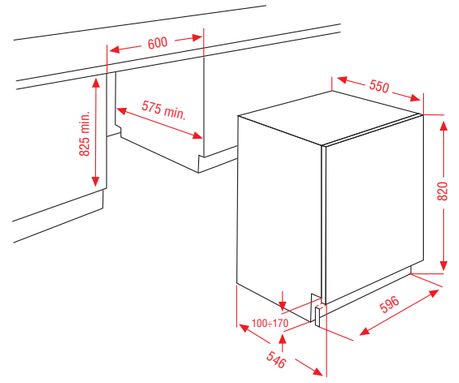

BUILT-IN WASHING MACHINE

LWI842

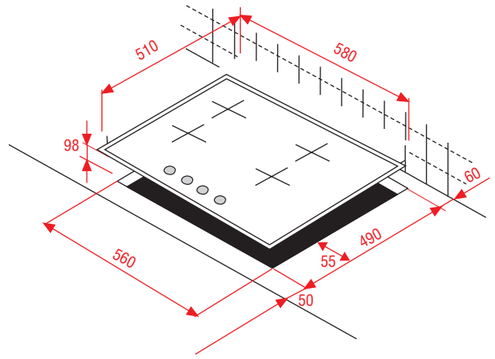

BUILT-IN GAS HOB

GEN 53403 E

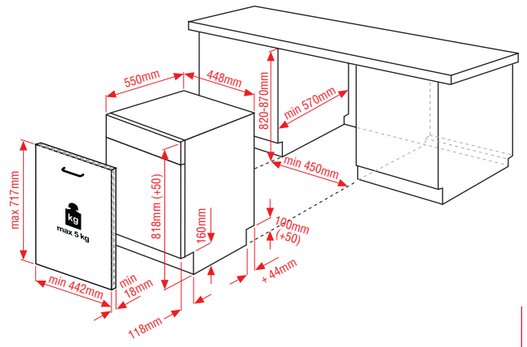

BUILT-IN DISHWASHER

LDVS2284

INSTALLATION DIAGRAMS

All measurements in (mm)

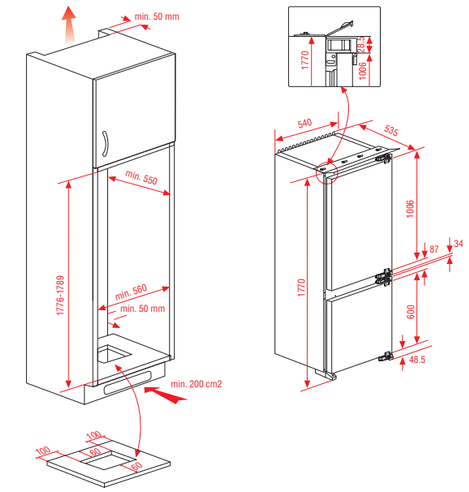

BUILT-IN REFRIGERATION

KNM1551i

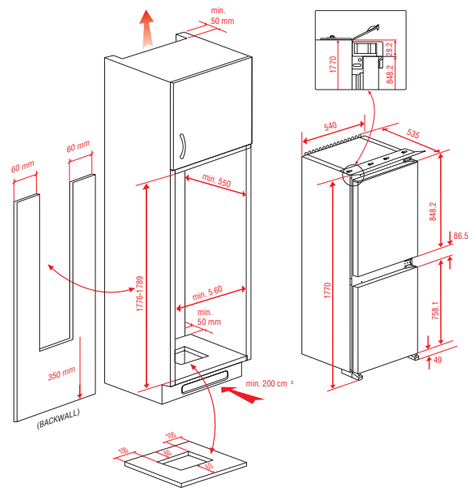

BUILT-IN REFRIGERATION

KNM1561i

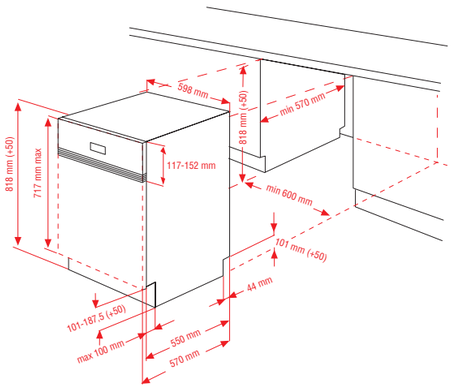

BUILT-IN DISHWASHER

LDVN2284

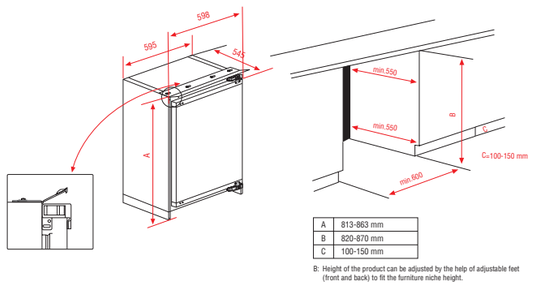

A	813-863 mm
B	820-870 mm
C	100-150 mm

B: Height of the product can be adjusted by the help of adjustable feet (front and back) to fit the furniture niche height.

BUILT-IN REFRIGERATION

TSM1750u FSE1630u

NOTES

NOTES

Blomberg continuously seek improvements in specification, design and production of products and thus alterations take place periodically. Whilst every effort is made to produce up-to-date literature, this brochure should not be regarded as an infallible guide to current specifications, nor does it constitute an offer for the sale of any particular appliance.

Blomberg
seit 1883

Blomberg
1 Greenhill Crescent
Watford
Hertfordshire
WD18 8QU
Tel: 0845 850 5008
Fax: 0845 600 4925
www.blomberguk.com

PR00010090 SEPTEMBER 2015 / V1